DRG. N°	SHEET 1 OF 1
A0	162-10270

DRG. PRACTICE TO B.S. 308. THIRD ANGLE PROJECTION

REF	DRG No.	DESCRIPTION	QTY	REMARKS
1	162-10102	BEAM TUBE	1	
2	162-10257	.	1	
3	162-10269	.	1	
4	162-10271	.	1	
5	162-10280	MINIBALL GUIDE RAILS	1	

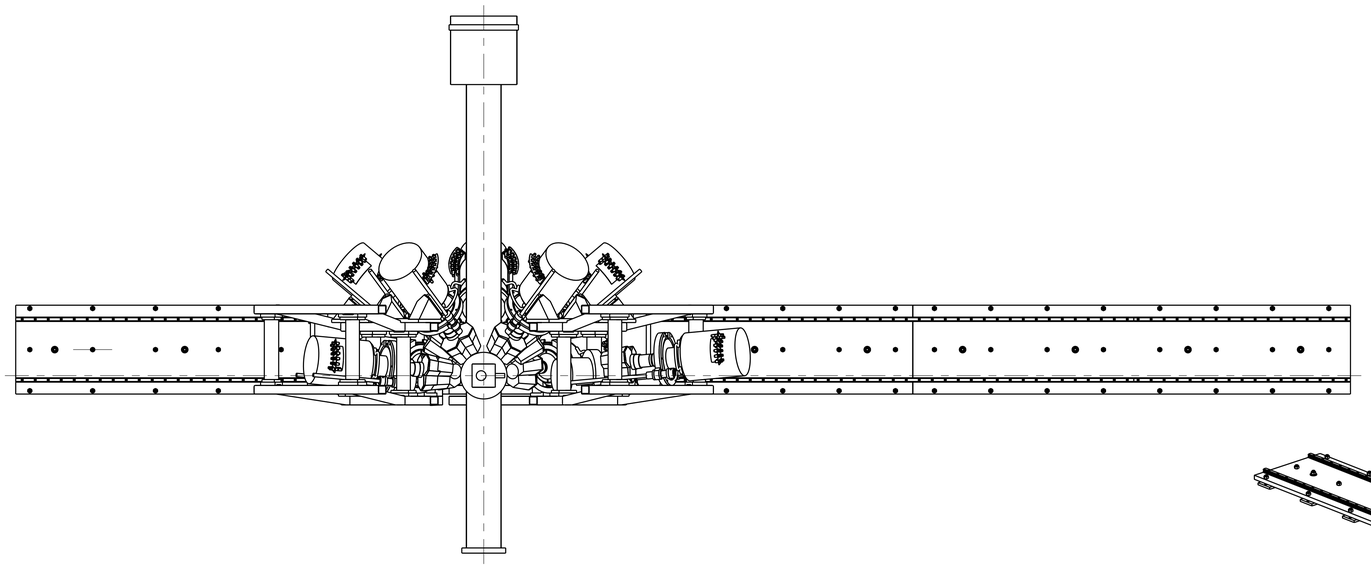

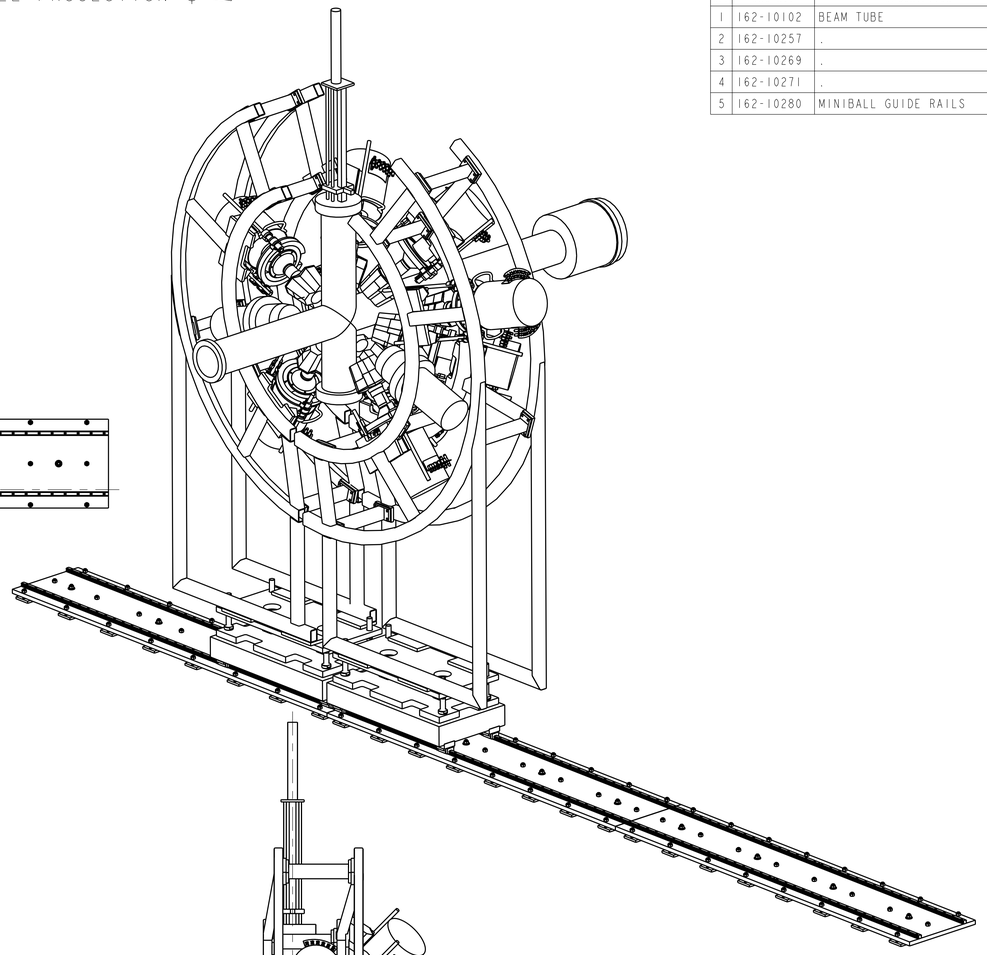

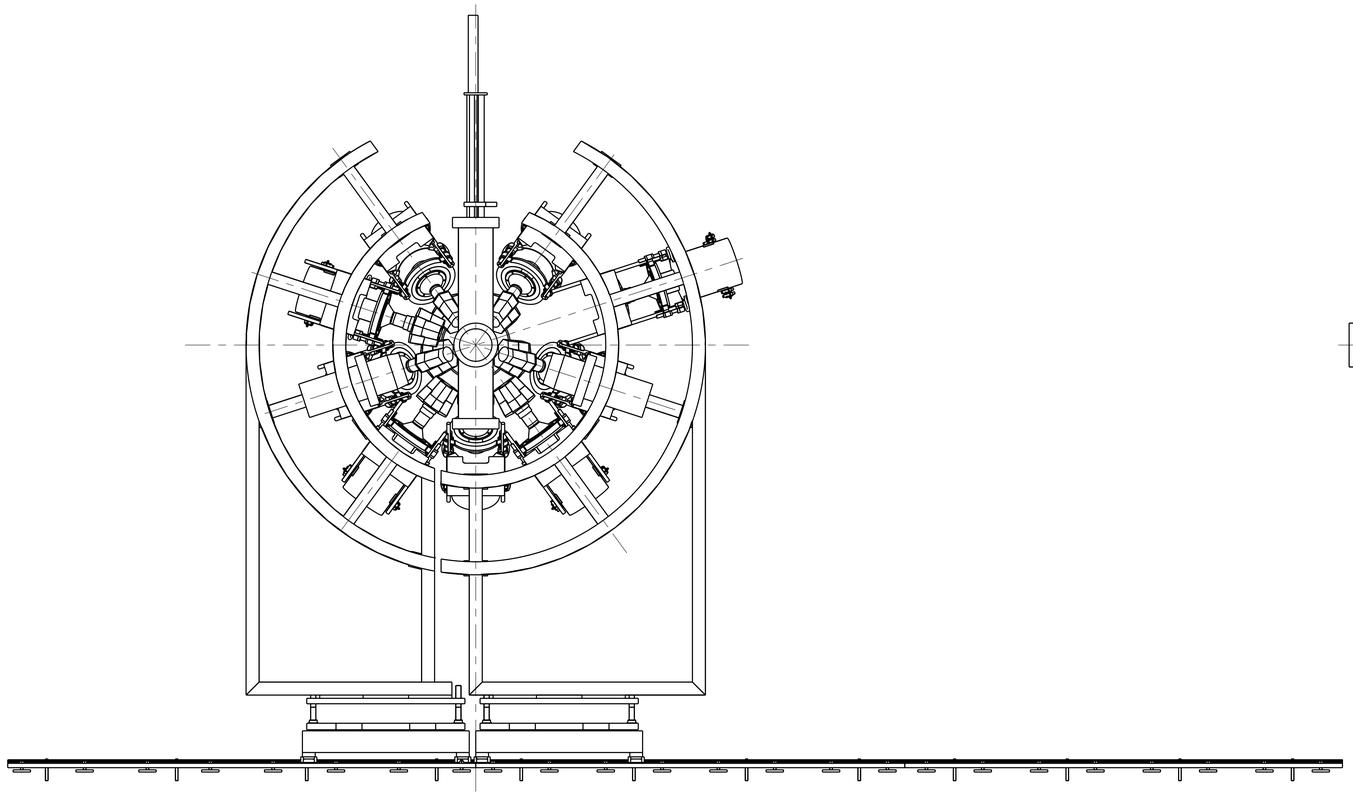

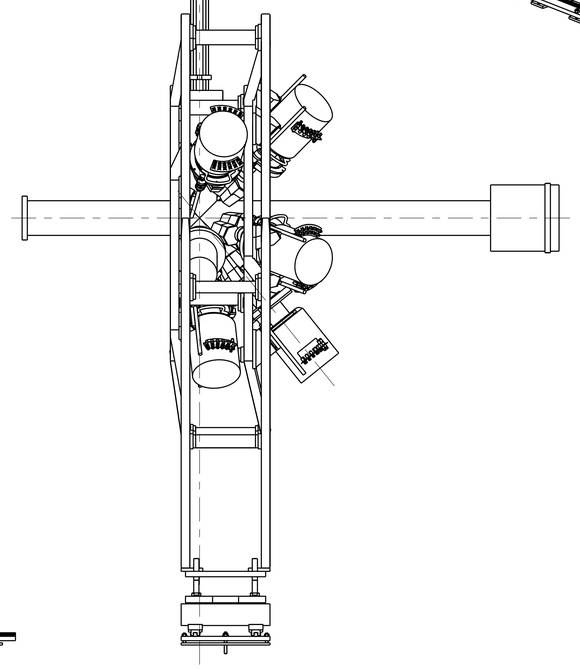

UNCONTROLLED COPY

WELDING SPEC --------

MATERIAL SPEC --------

MATERIAL --------

TOLERANCES UNLESS OTHERWISE STATED

LINEAR DIMENSIONS UP TO - ± - ;OVER - ± -

ANGULAR DIMENSIONS ± -

SCALE 1:10 0 1000

ALL DIMENSIONS IN mm's UNLESS OTHERWISE STATED

DRN.	RG	COUNCIL FOR THE CENTRAL LABORATORY OF THE RESEARCH COUNCILS
DATE.	19/02/04	DARESBURY LABORATORY CHESHIRE
CKD.	---	TITLE
DATE.	--/--/--	ARRANGEMENT OF MINIBALL DETECTORS RISING ARRAY AT GSI
APPD.	---	
DATE.	--/--/--	

DRAWING N° A0 162-10270 SHEET 1 OF 1 ISSUE A

PROJE CAD PART N° 162-10270

USED ON

CONTRACTORS COMPANY --------

CONTRACTORS DRG N° .

A	FIRST ISSUE

THIS DRAWING IS THE PROPERTY OF CCLRC AND MAY NOT BE COPIED OR USED FOR ANY PURPOSE OTHER THAN THAT FOR WHICH IT IS SUPPLIED WITHOUT THE EXPRESS WRITTEN AUTHORITY OF CCLRC.

ORIGINAL FRAME SIZE 1139mm X 791mm