Data Acquisition Backbone Core

J.Adamczewski, H.G.Essel, N.Kurz, S.Linev

GSI, Experiment Electronics: Data Processing group

What we have done since January (Legnaro)
Performance measurements
What comes next

Work supported by EU RP6 project JRA1 FutureDAQ RII3-CT-2004-506078

Driving forces for DABC

2004 → EU RP6 project JRA1 FutureDAQ*
2004 → CBM FutureDAQ for FAIR
2005 → FOPI DAQ upgrade (skipped)

1996 → MBS future
50 installations at GSI,
50 external
http://daq.gsi.de

Intermediate demonstrator

- Detector tests
- FE equipment tests
- Data transport
- Time distribution
- Switched event building
- Software evaluation
- MBS event builder
- General purpose DAQ

Requirements

- build events over fast networks
- handle triggered or self-trigger front-ends
- process time stamped data streams
- provide data flow control (to front-ends)
- connect (nearly) any front-ends
- provide interfaces to plug in application codes
- connect MBS readout or collector nodes
- be controllable by several controls frameworks

Data
Acquisition
Backbone
Core

* RII3-CT-2004-506078

Frontend components test

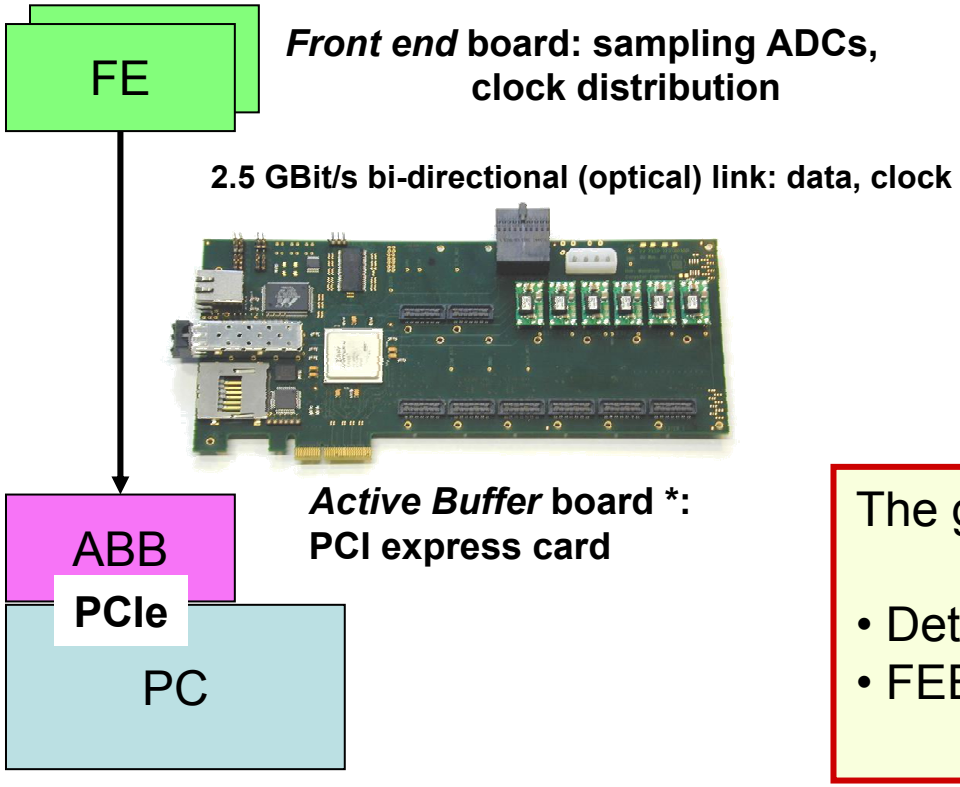

FE: Frontend board
DC: Data combiner board
ABB: Active Buffer board
GE: Gigabit Ethernet
IB: InfiniBand

The goal:

- Detector tests
- FEE tests

* A.Kugel, G.Marcus, W.Gao, Mannheim University Informatics V

Frontend components test, a use case

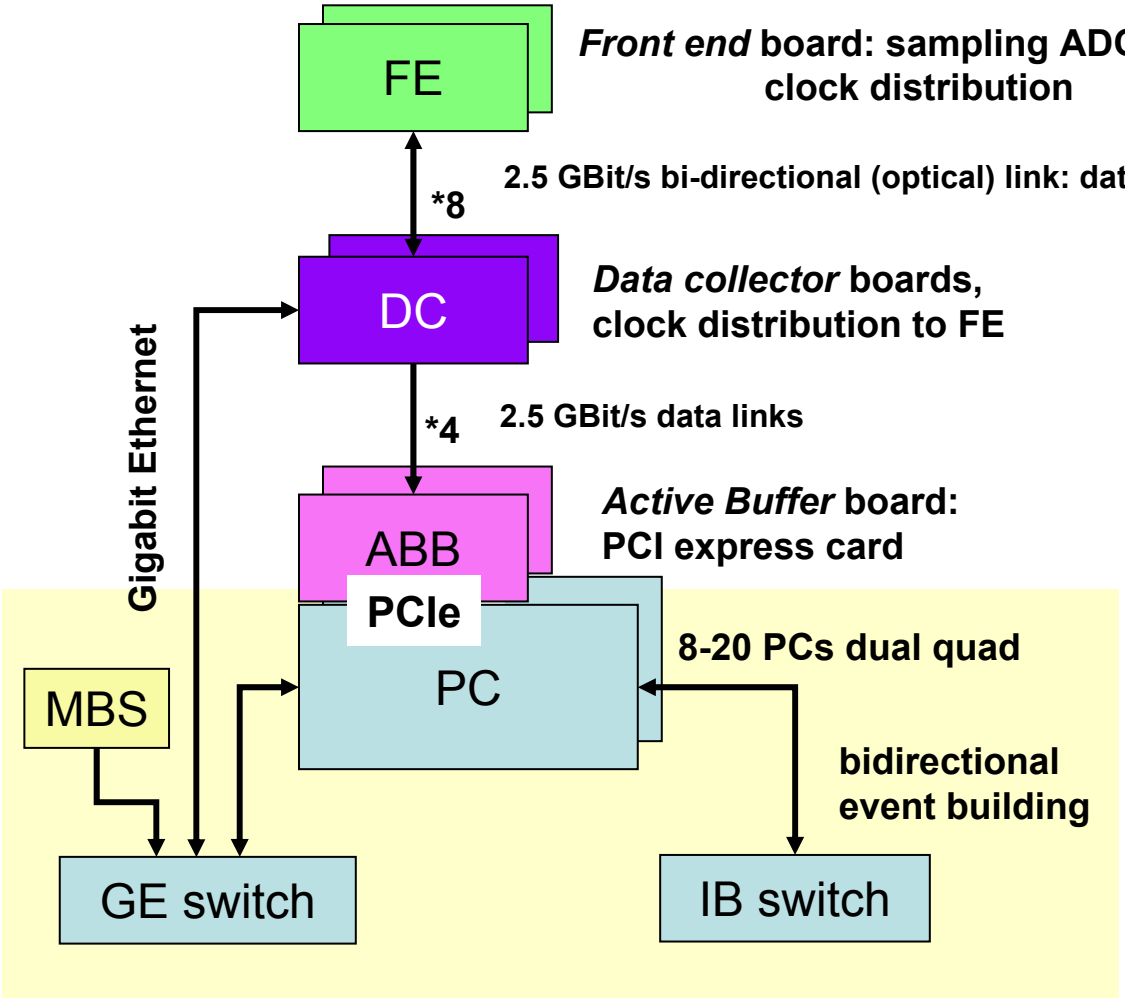

FE: Frontend board
DC: Data combiner board
ABB: Active Buffer board
GE: Gigabit Ethernet
IB: InfiniBand

The goal:
- Investigate critical technology
- Detector tests
- Replace existing DAQ

Scales up to 10k channels, 160 CPUs

MBS topologies

n x m multiple EBs

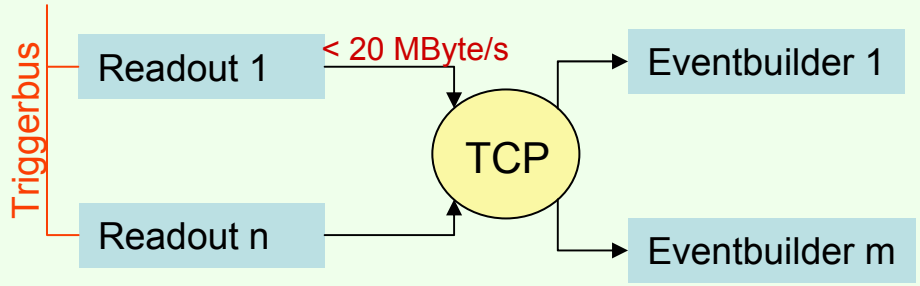

EB hierarchy

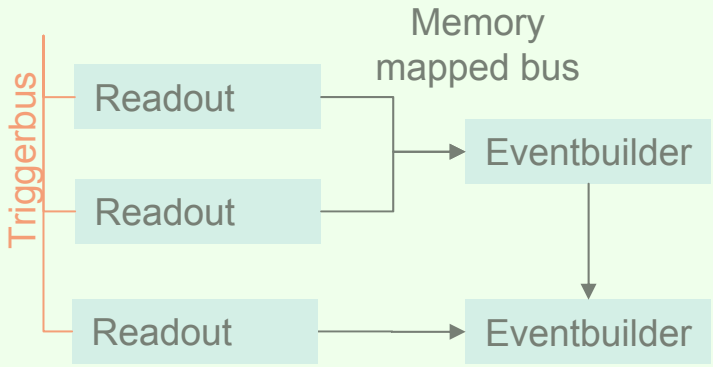

Time stamped (20 ns)

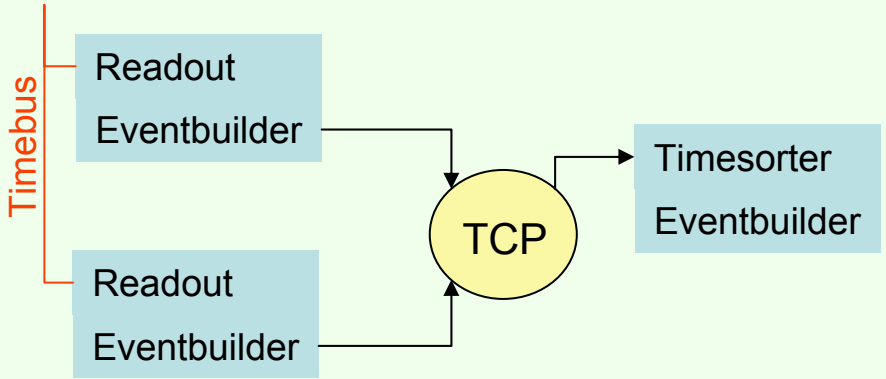

EB data transport

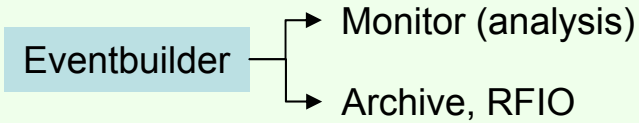

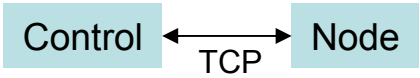

DABC overview

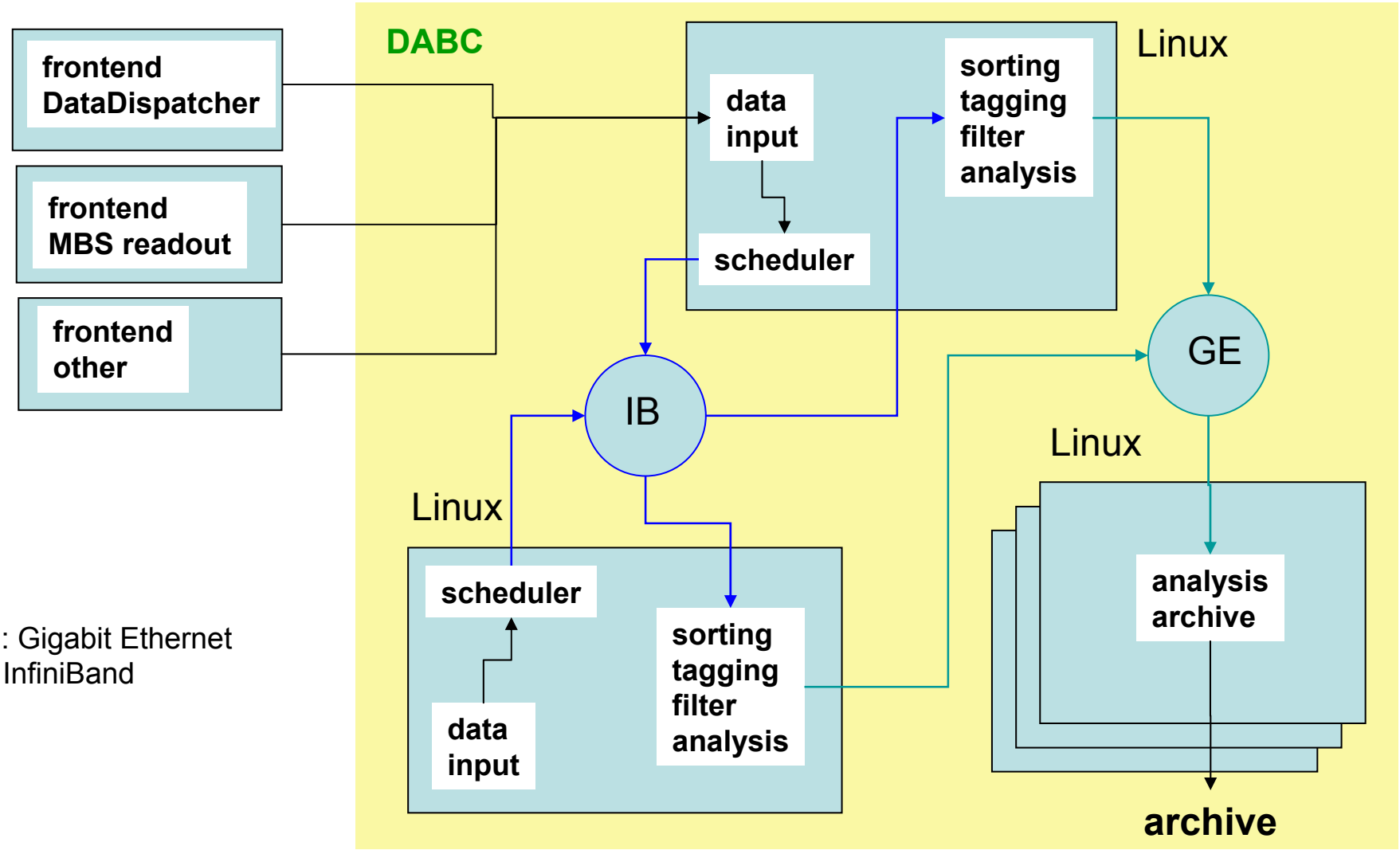

GE: Gigabit Ethernet
IB: InfiniBand

DABC: Software objects of data flow engine

A *module* processes data of one or several data streams

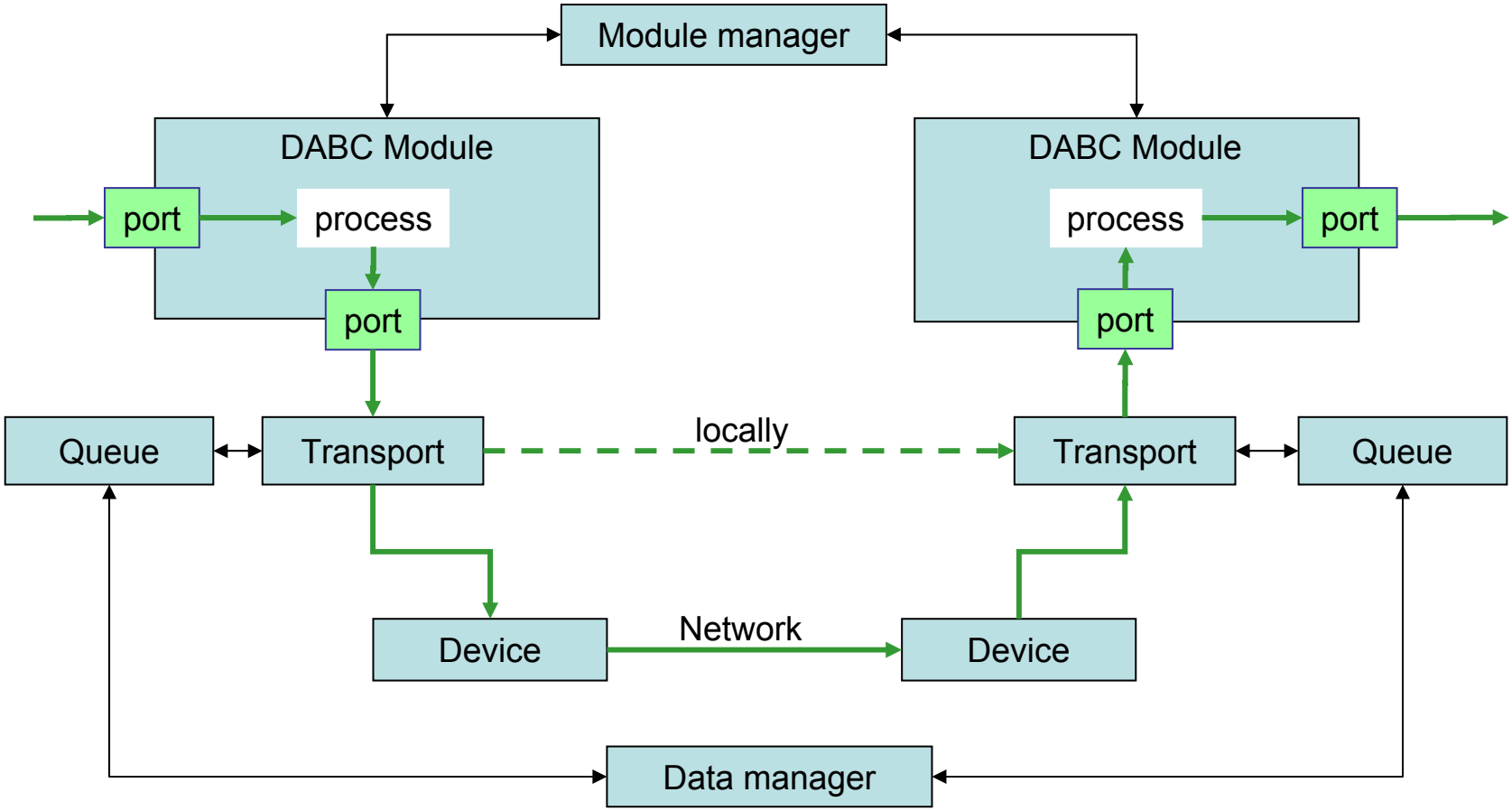

XDAQ* Infrastructure

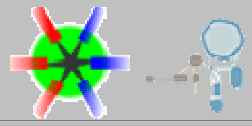

* Standard DAQ framework for LHC CMS experiment

Orsini, Gutleber http://xdaqwiki.cern.ch

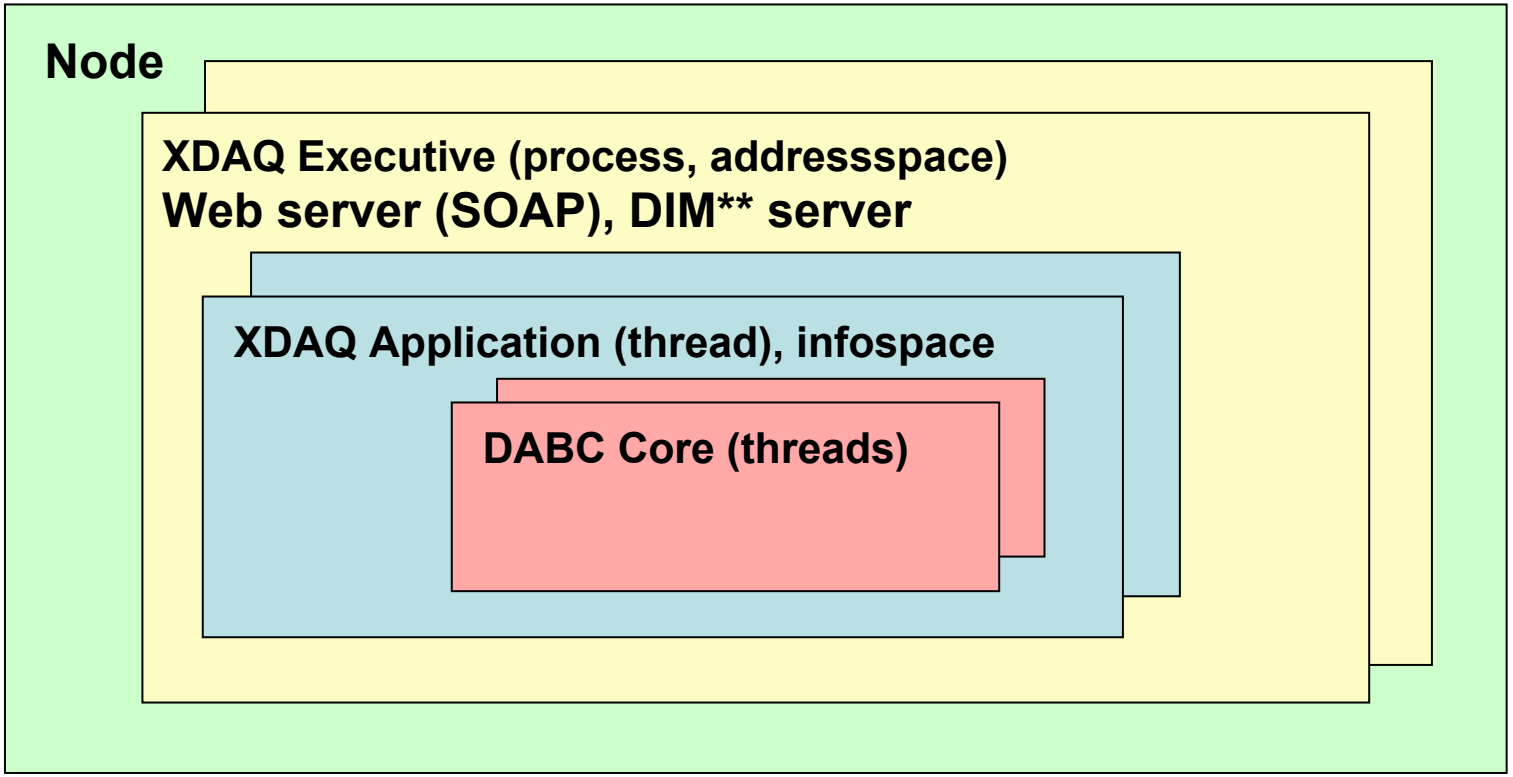

** DIM: Distributed Information Management System, CERN

DABC: Synchronization

Commands are synchronized with the data flow through the ActionEvent manager

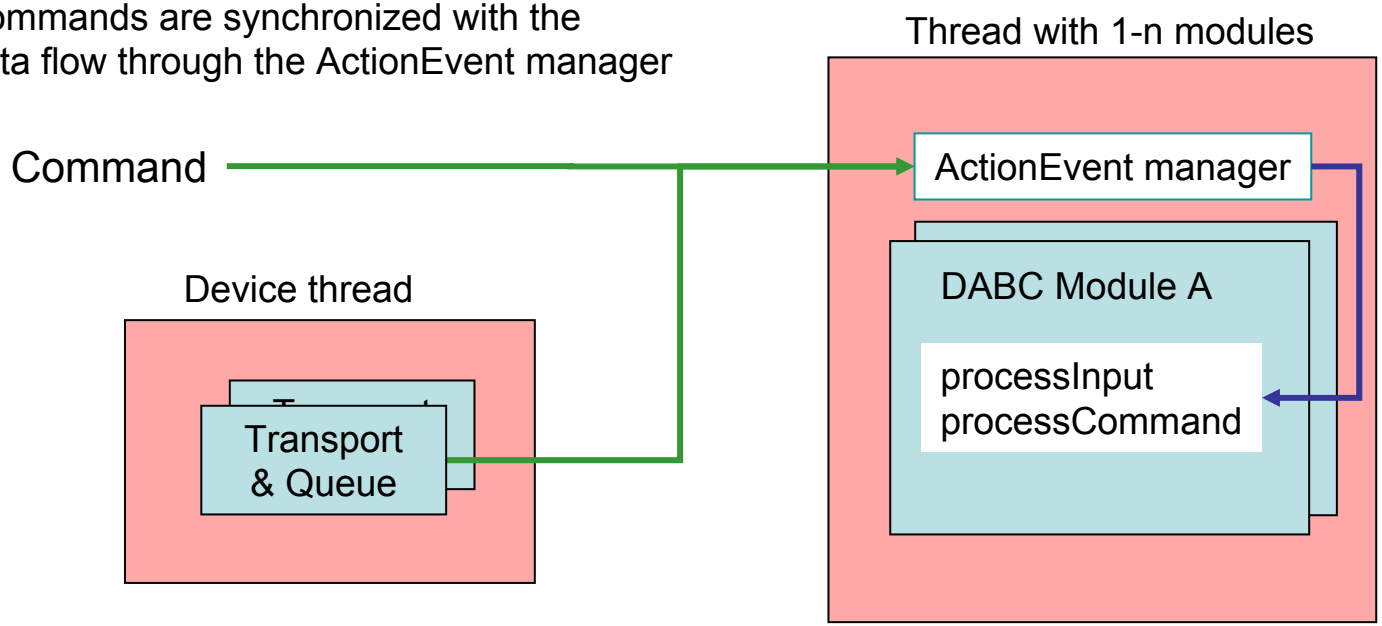

A device, i.e. socket device controls several ports (transports).
Once a queue buffer is filled, the transport signals the ActionEvent manager, which in turn calls the processInput function of the associated module.

DABC: Example with module chain

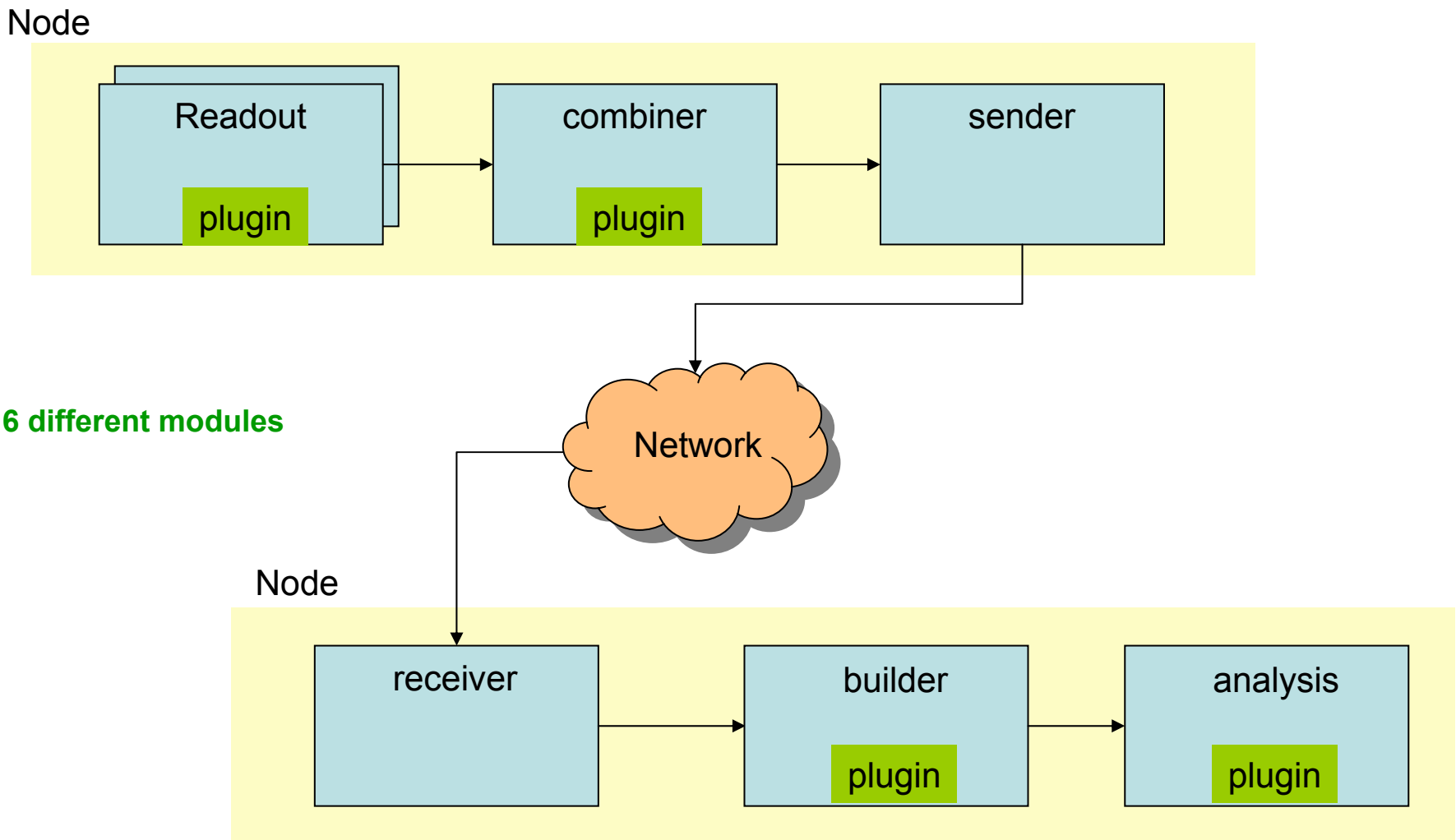

6 different modules

Class diagram as currently implemented

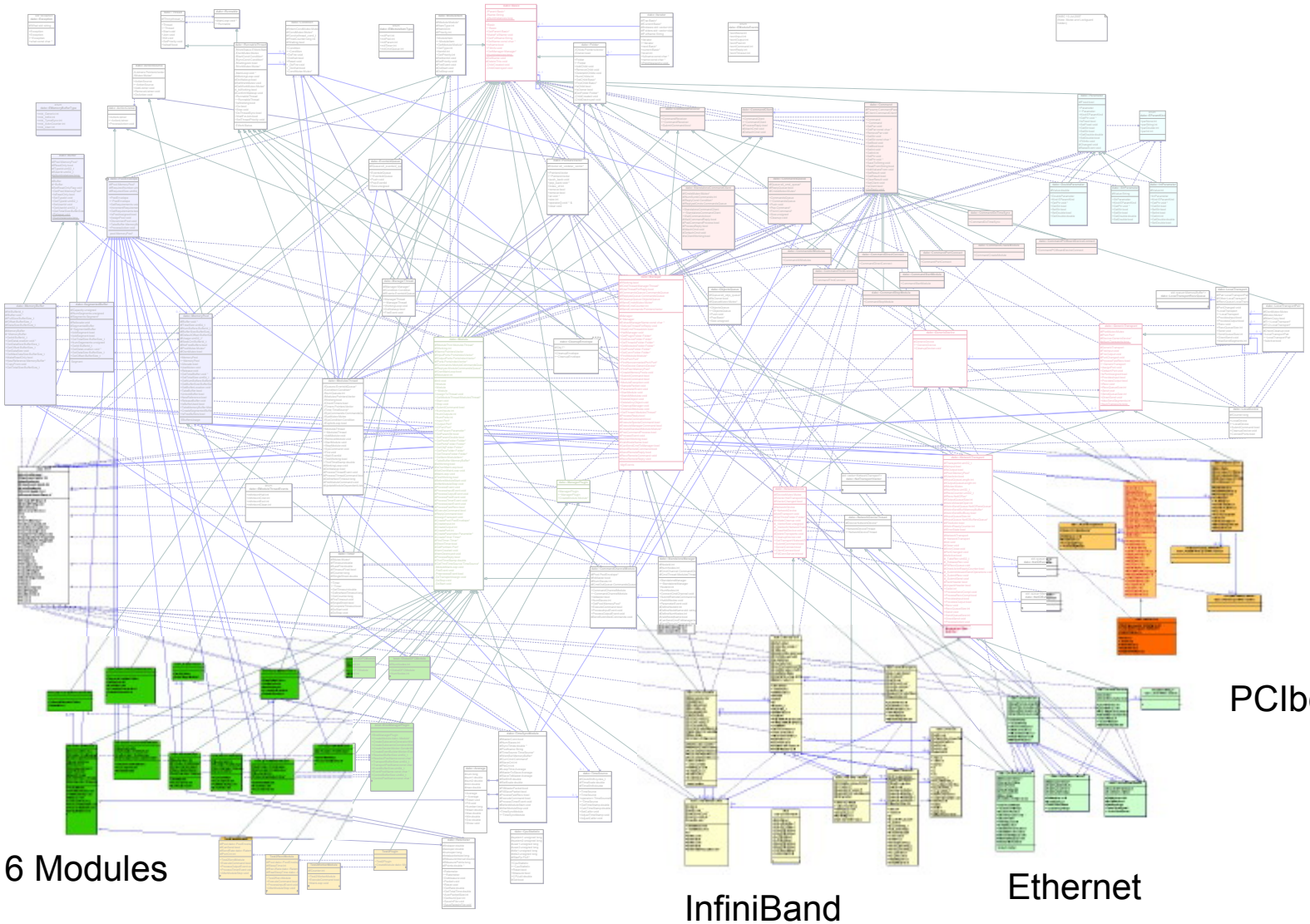

Implementation of a PCI board

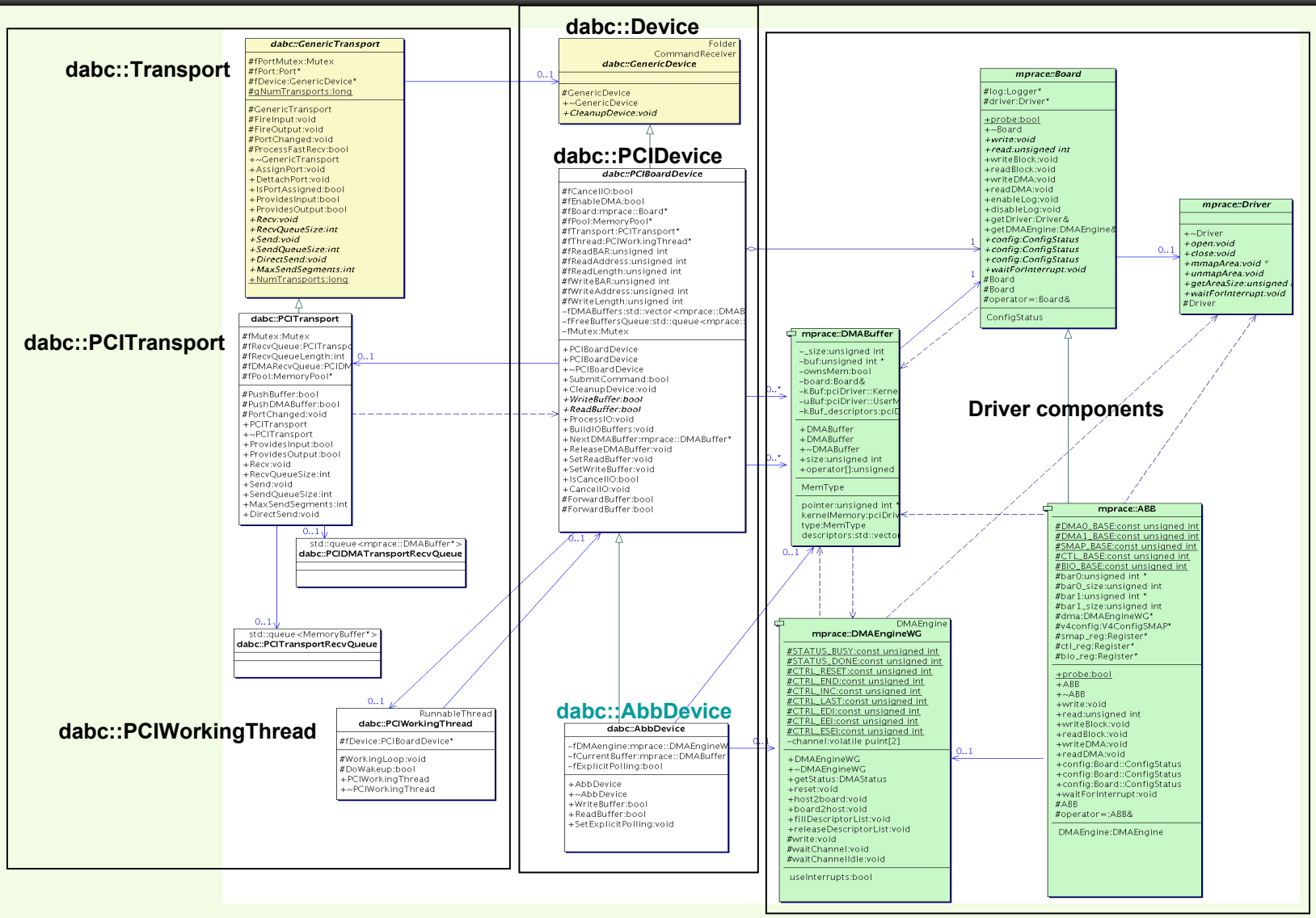

Tools for controls

- Configuration via XML files
- State machines, Infospace, message/error loggers, monitoring
- Communication: Webserver, SOAP, DIM
- Connectivity through DIM to: LabView, EPICS, Java, any DIM client/server
- Java with NetBeans (Matisse GUI builder) maybe soon in Eclipse
- Front-end controls?
- Mix of cooperating control systems
- First LabView and Java GUIs operable

Controls & monitoring communication

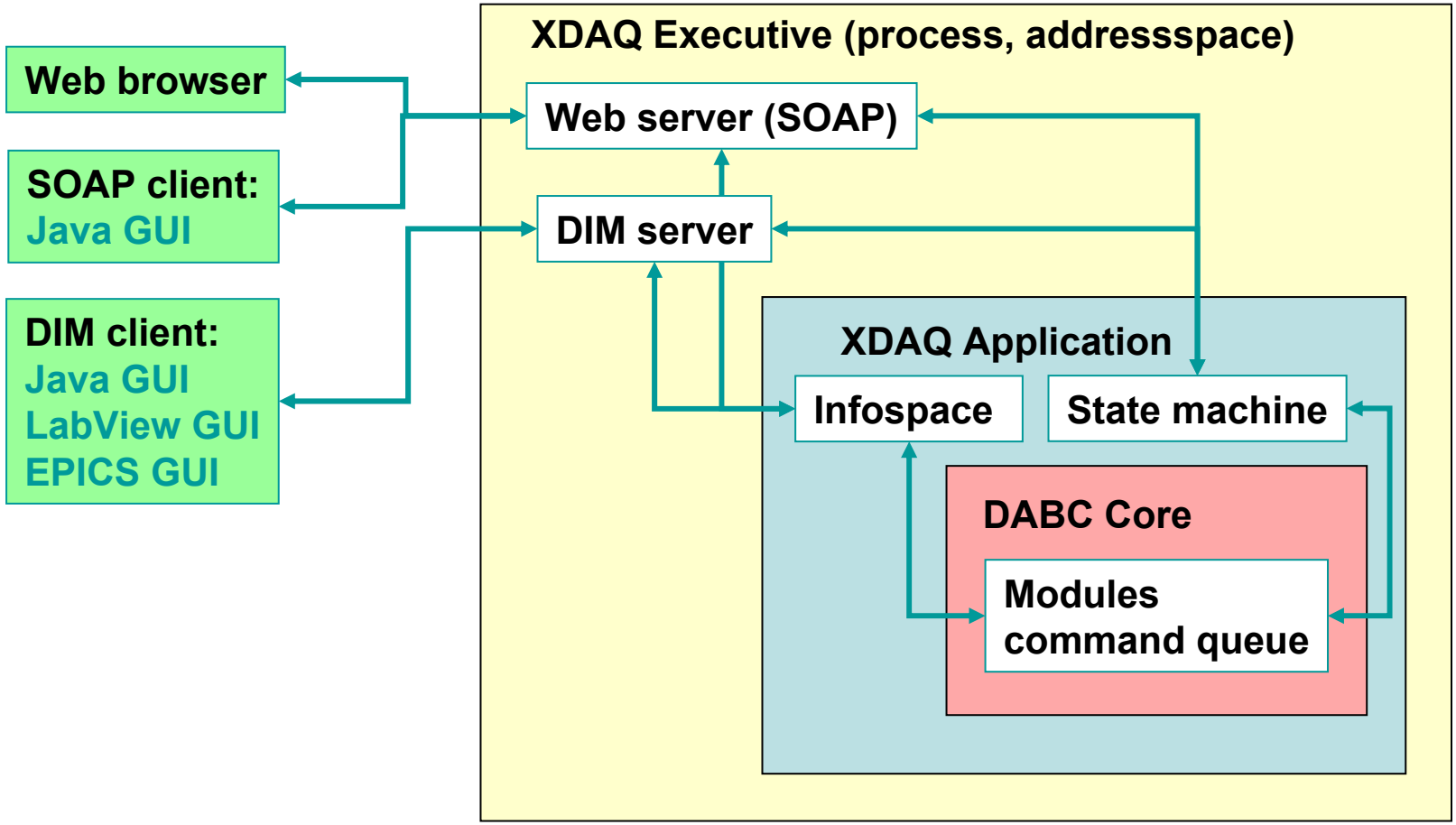

Java-DIM Control

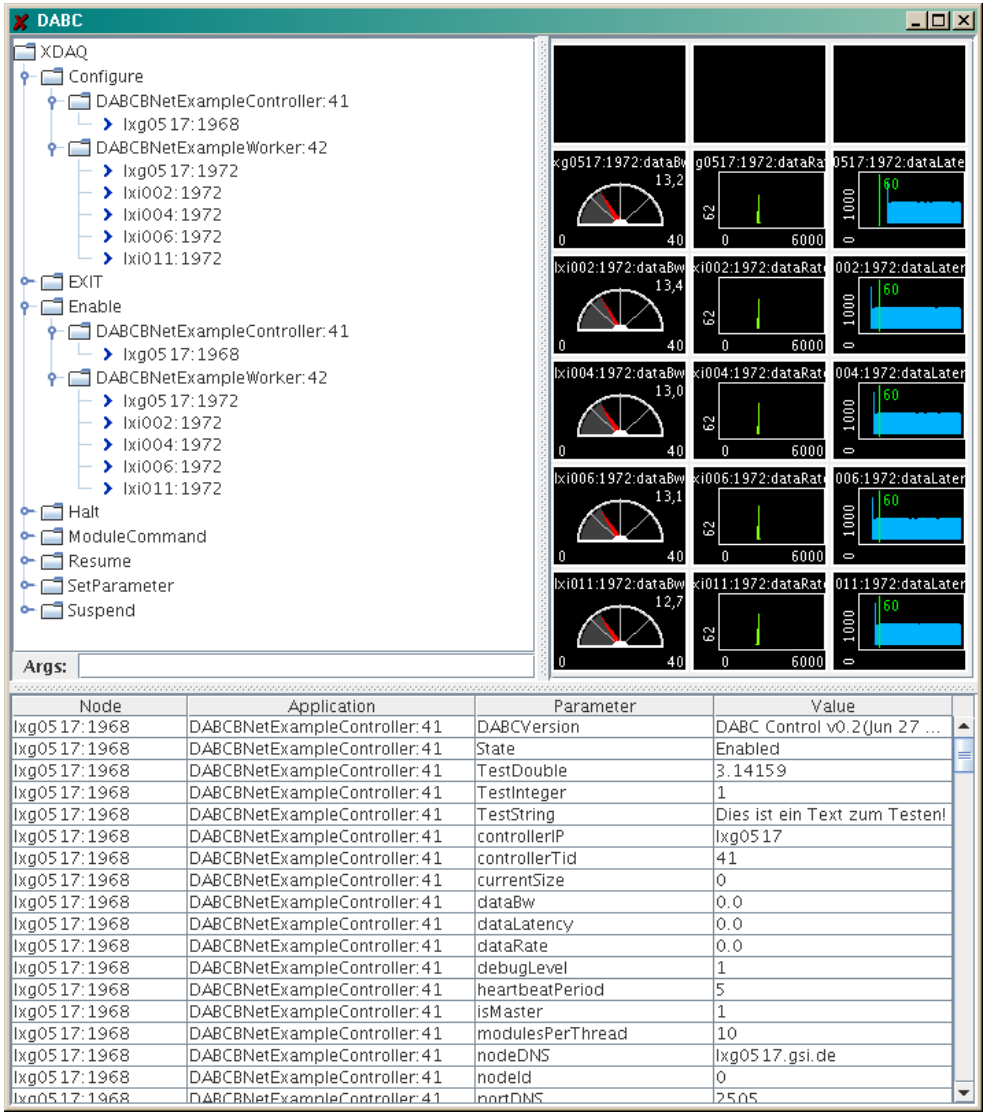

Generic construction from commands and parameters offered by DABC DIM servers

Applications create the commands and parameters and publish

Rate meter, trending, statistics

InfiniBand test cluster at GSI

- 4 nodes:
  - Double Opteron 2.2 GHz, 2GB RAM
  - Mellanox MHES18-XT host adapter (PCIe)
  - 2x Gigabit Ethernet host adapters
  - SuSE Linux 9.3, x64bit version
- Mellanox MTS2400 24X InfiniBand switch

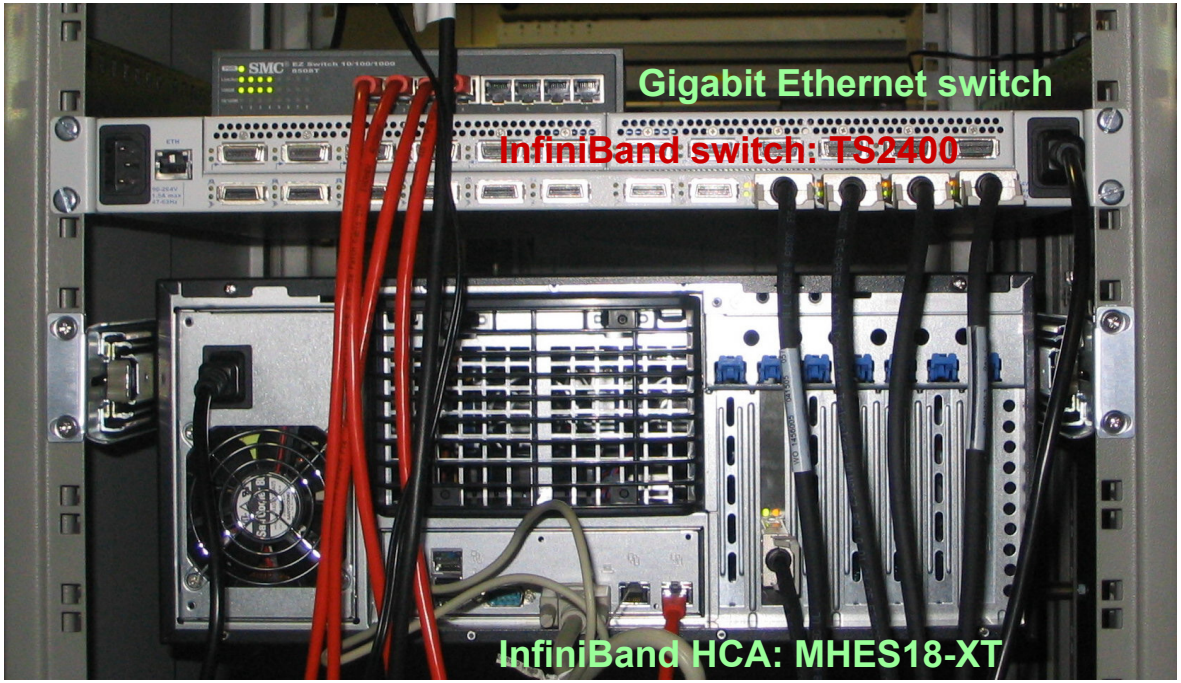

Network test performance 4x4 bidirectional

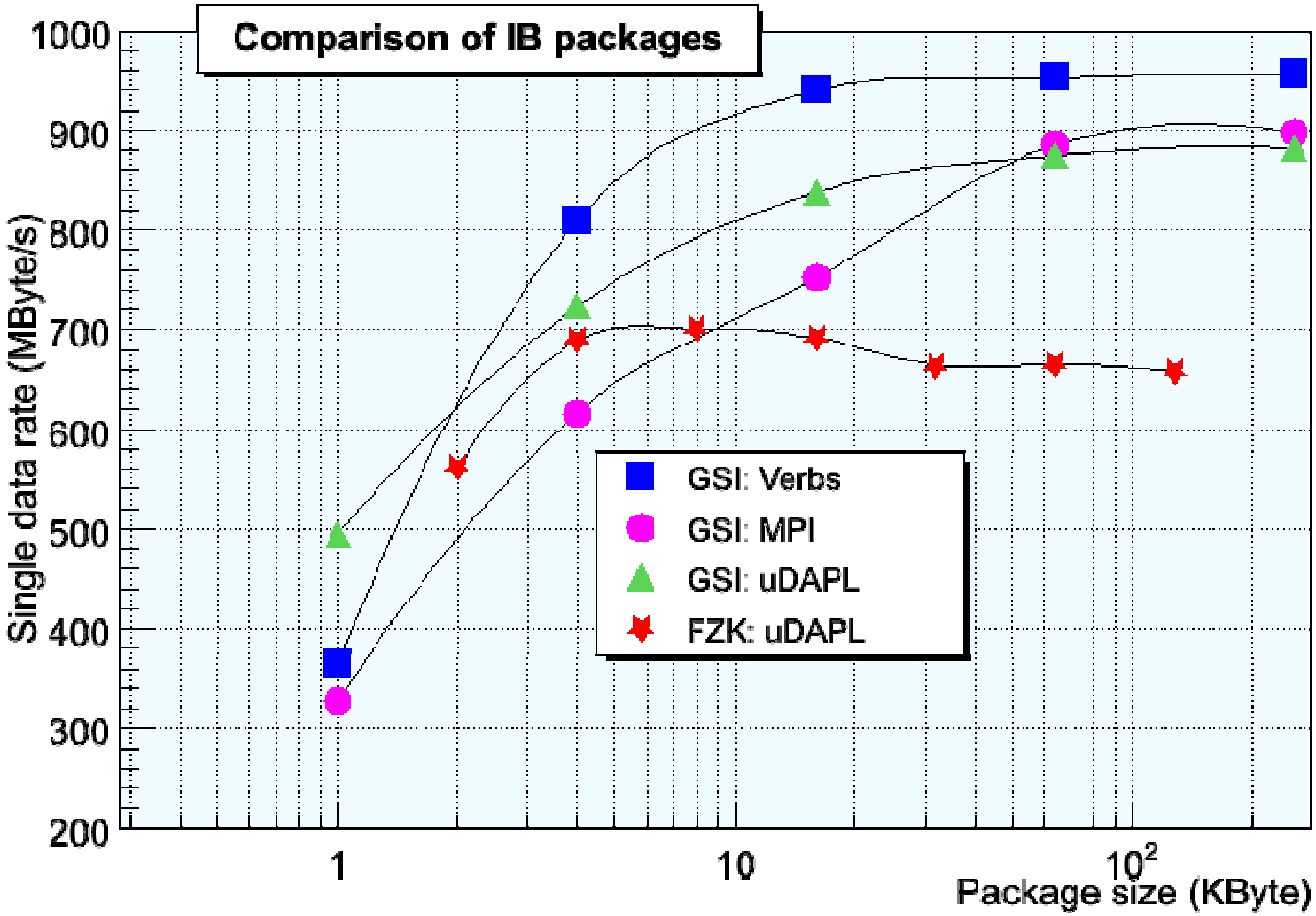

Optimized transfer (23 nodes at FZK), all to all

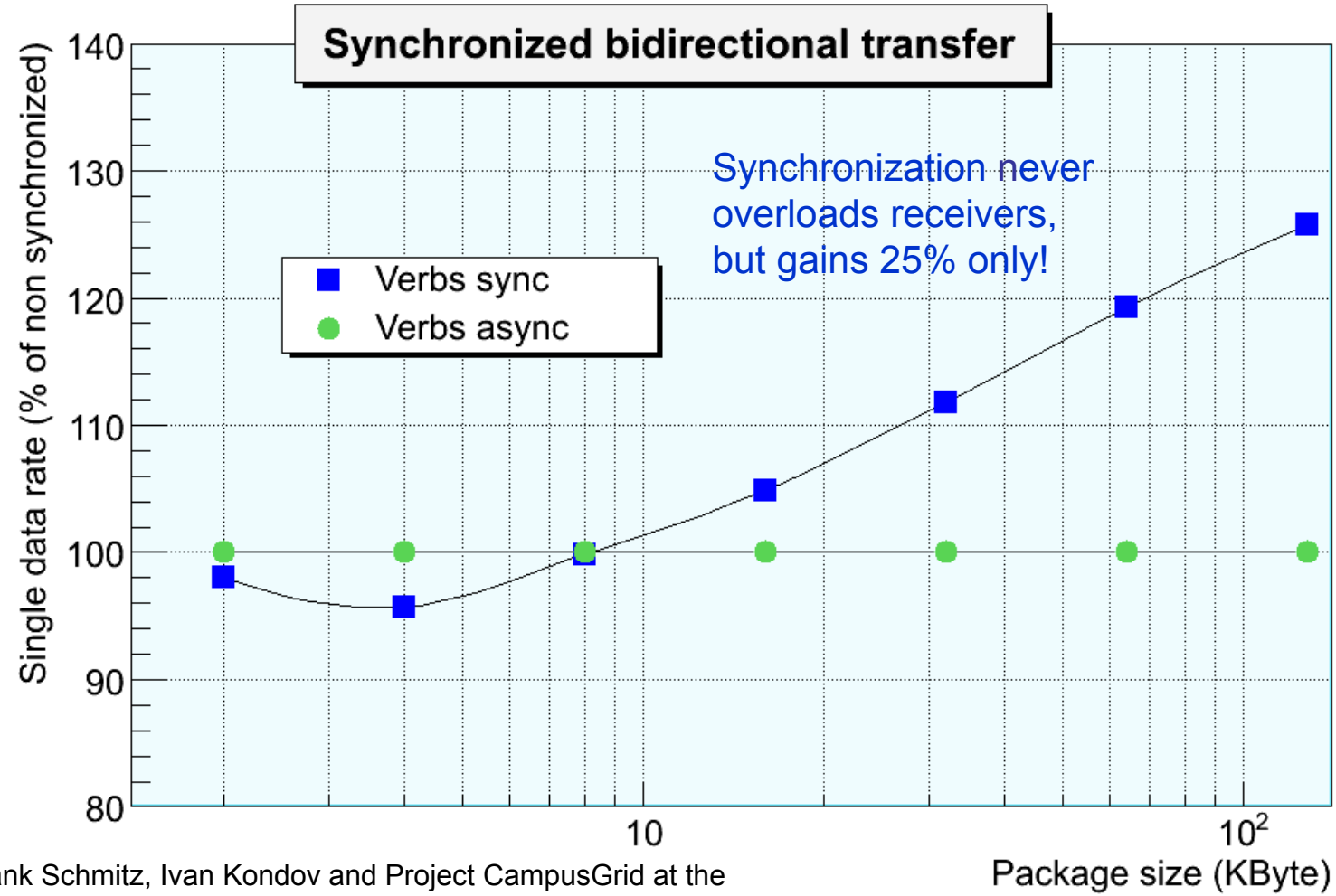

We thank Frank Schmitz, Ivan Kondov and Project CampusGrid at the Institute for Scientific Computing, Forschungszentrum Karlsruhe for providing resources and support for the large-scale measurements.

Scaling of performance (FZK)

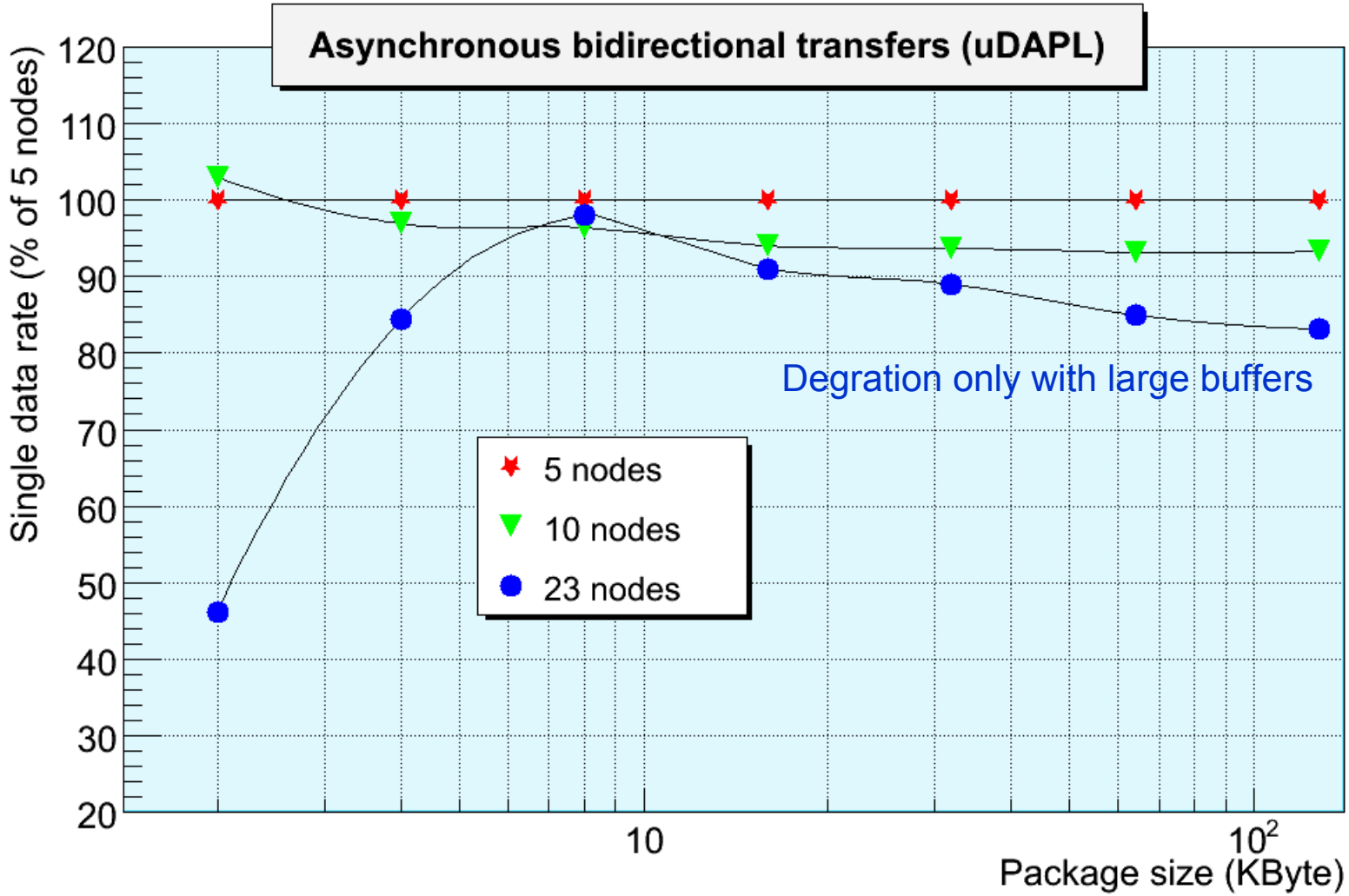

DABC: Full event building example measurement

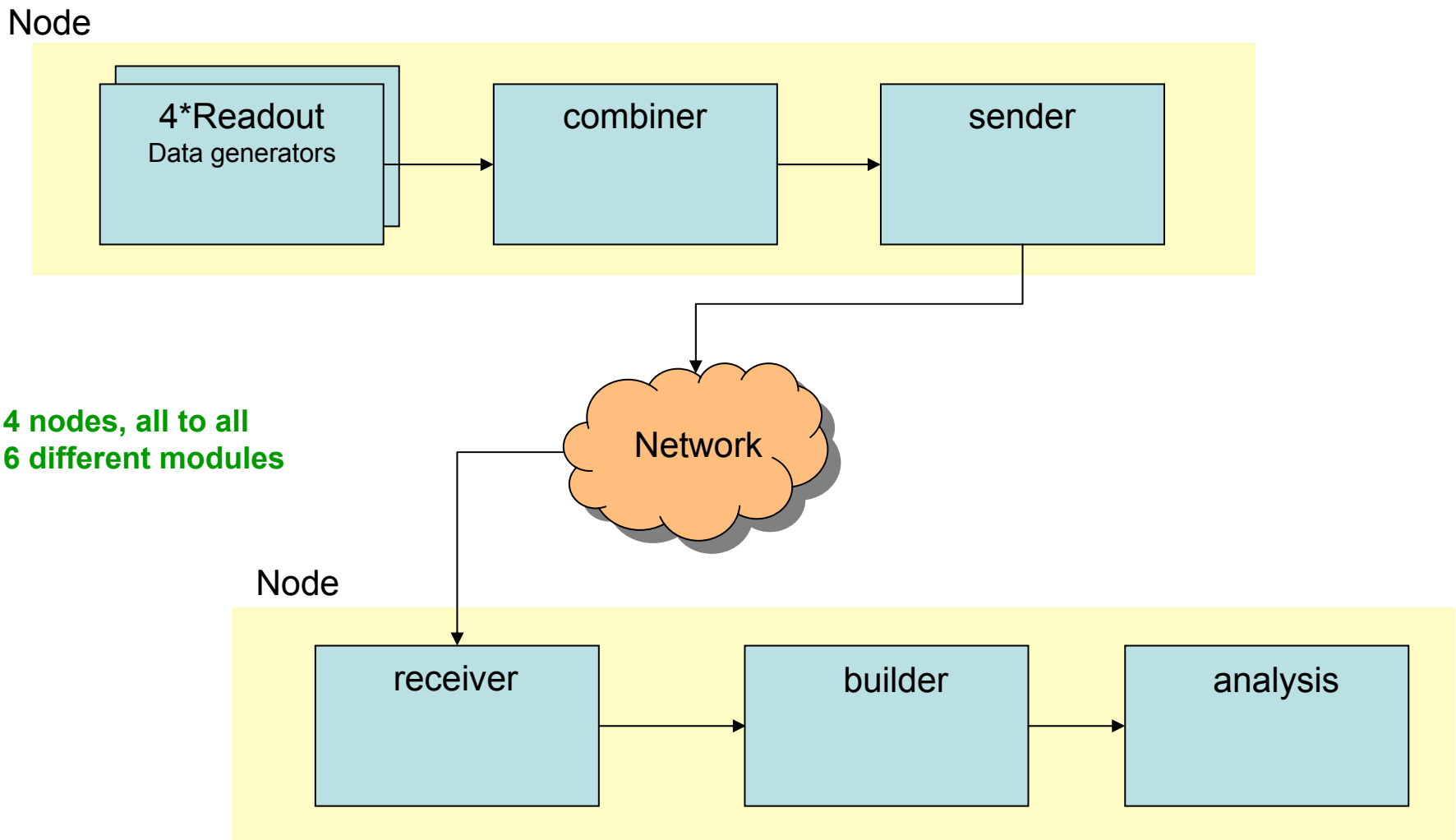

4 nodes, all to all
6 different modules

Dataflow engine and event building rate

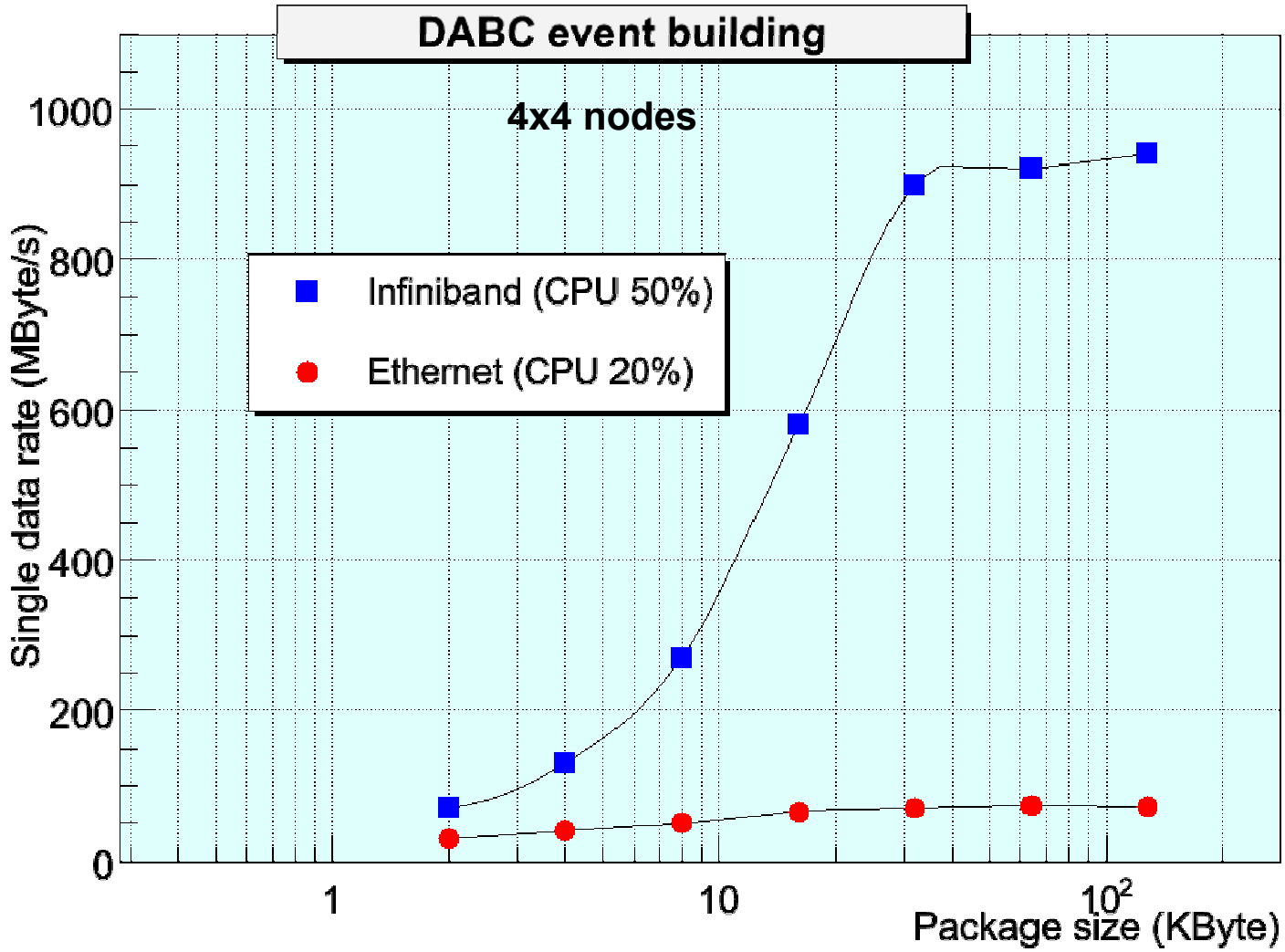

DABC further tasks

Achieved

- Infrastructure
  - Setup, configure
  - Communication lines
  - Multithreading
- Data flow engine
  - InfiniBand
  - Sockets (Gigabit Ethernet)
  - first PCIexpress board
  - very high performance
- Very first (0.1) Java GUI

Todo

- Data formats
- Combiner/Time sort
- MBS
- Event building
- Final Programming Interface definitions

Resources and time

- People of data processing group
  H.G.Essel
  J.Adamczewski
  N.Kurz
  S.Linev
- People of controls group
  maybe one FTE
- People from CBM
  hopefully

- **CBM requires in 2007 a data taking system**
  Start with small system, grow on demand
  Preliminary controls
- **NUSTAR ?**
  In discussion
- **MBS** currently rather a first test bed