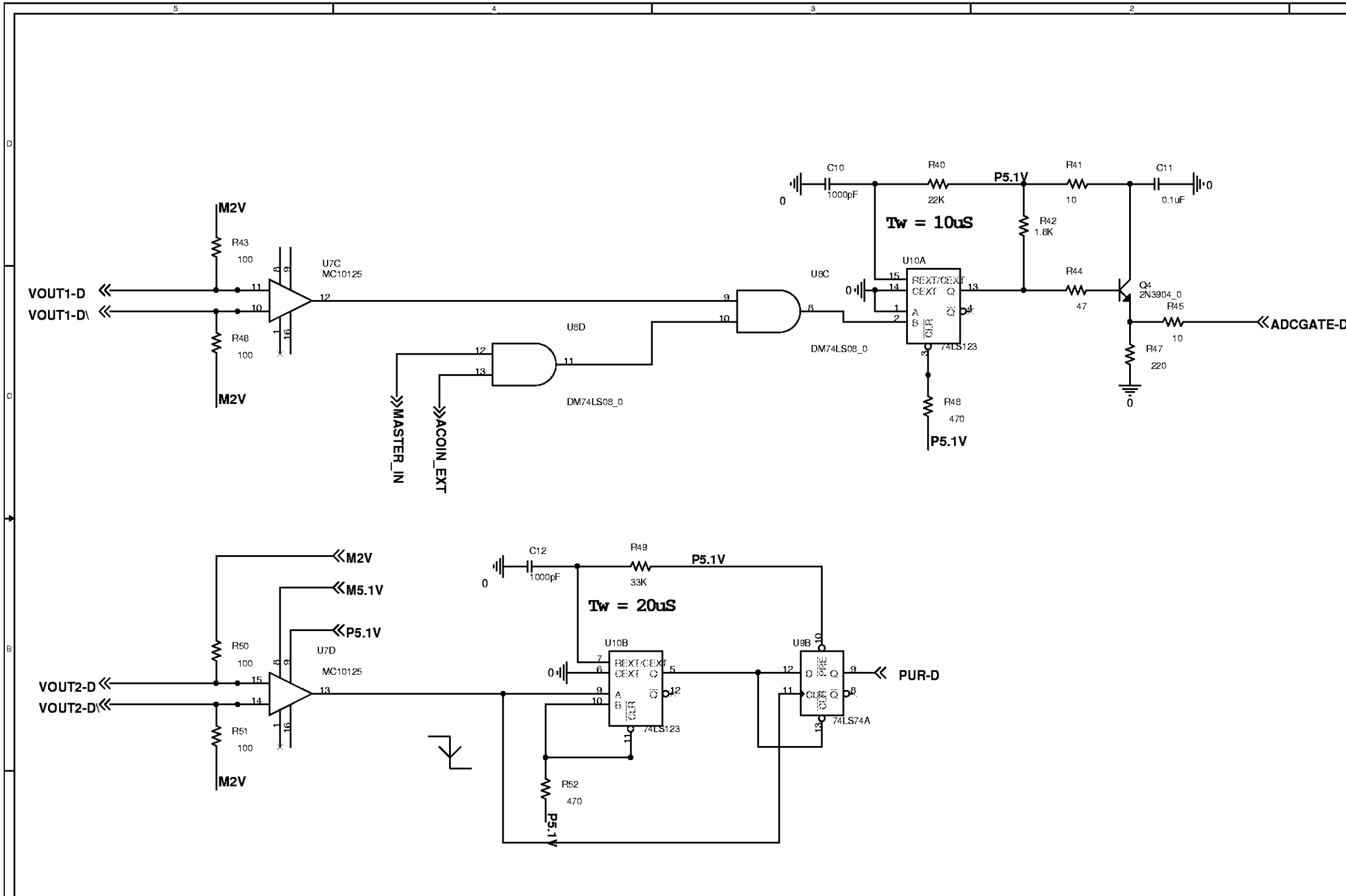
M2V
R43
100
U7C
MC10125
VOUT1-D
VOUT1-D\
R46
100
M2V
U8D
DM74LS08_0
MASTER_IN
ACOIN_EXT
U8C
DM74LS08_0
C10
1000pF
R40
22K
P5.1V
R41
10
C11
0.1uF
Tw = 10uS
R42
1.6K
U10A
REXT/CEXT
CEXT
Q
A
B
CLR
74LS123
R44
47
Q4
2N3904_0
R45
10
ADCGATE-D
R47
220
R48
470
P5.1V
M2V
M5.1V
P5.1V
R50
100
U7D
MC10125
VOUT2-D
VOUT2-D\
R51
100
M2V
C12
1000pF
R49
33K
P5.1V
Tw = 20uS
U10B
REXT/CEXT
CEXT
Q
A
B
CLR
74LS123
U9B
D
PRE
Q
CLK
CLR
74LS74A
PUR-D
R52
470
P5.1V