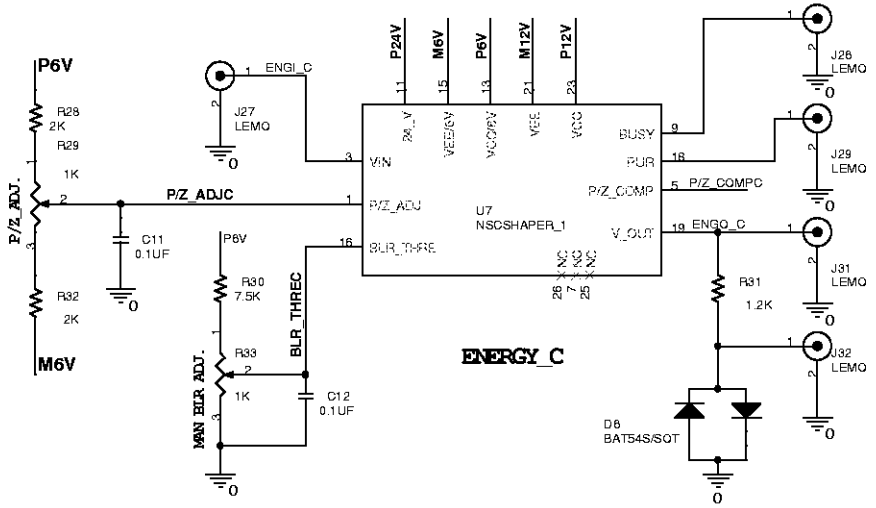

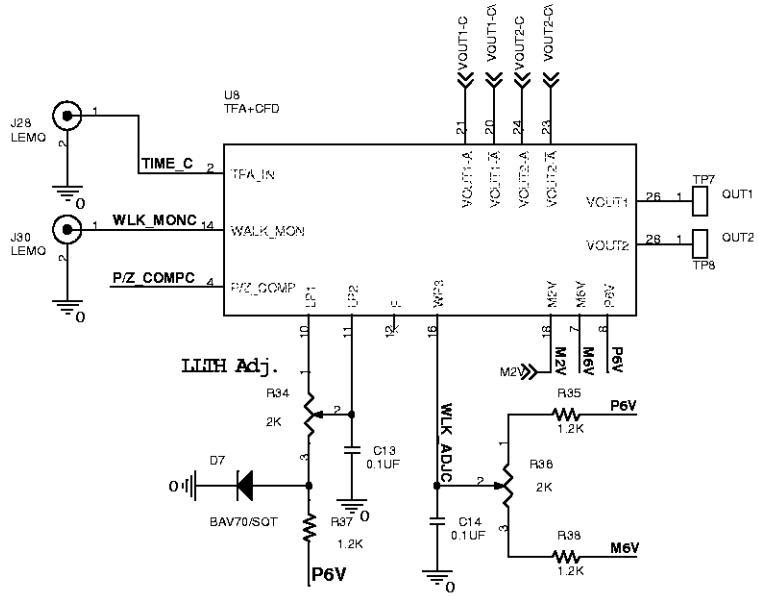

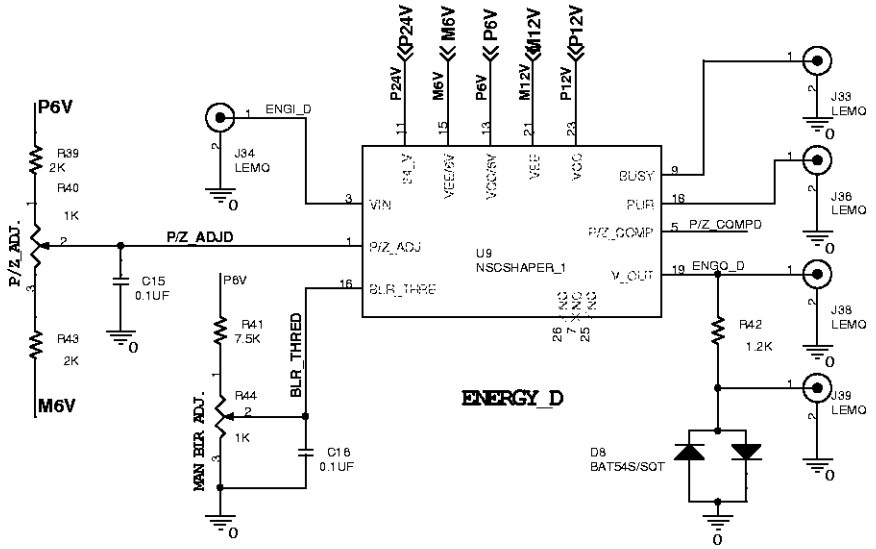

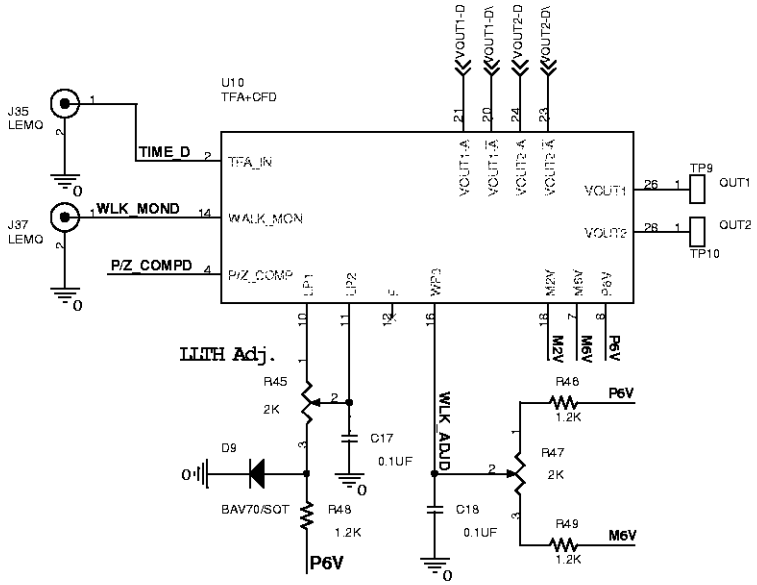

Title		Rev	<RevCode>
Size B	Document Number <Doc>	Sheet 8 of 8	
Date: Sunday, D			